REVISIONS				
ZONE	REV	DESCRIPTION	DATE	APPROVED
ALL	–	ORIGINAL ISSUE	12 MAY 10	P. KOTZEBUE

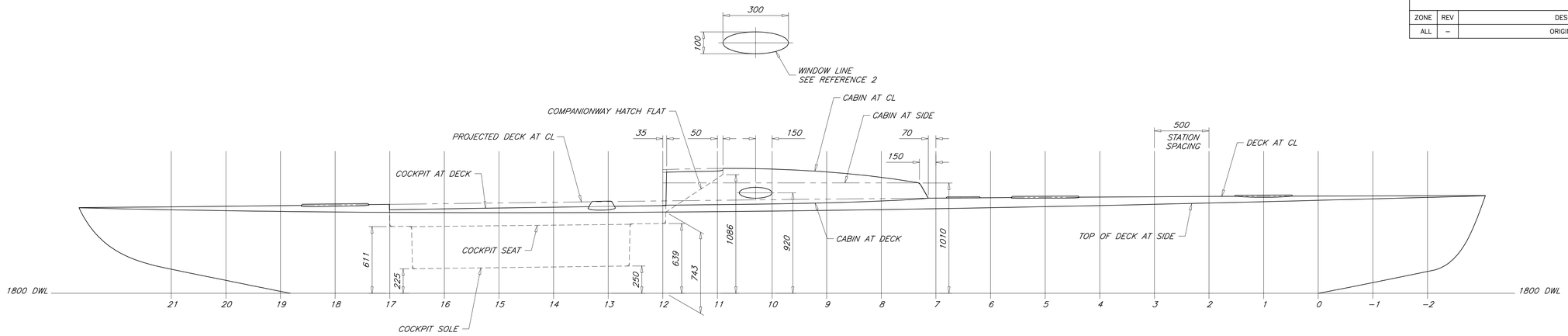

ELEVATION C–5
PROFILE

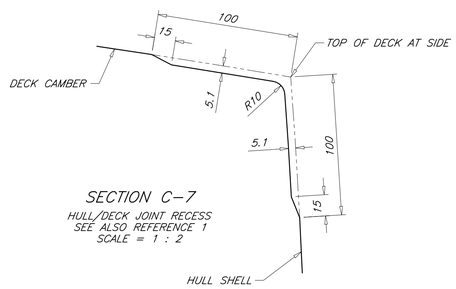

SECTION C–7
HULL/DECK JOINT RECESS
SEE ALSO REFERENCE 1
SCALE = 1 : 2

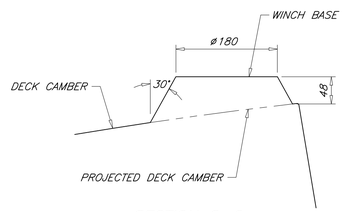

SECTION C–6
SECTION THRU WINCH BASE
SCALE = 1 : 5

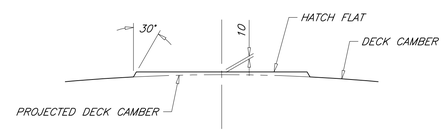

SECTION C–4
SECTION AT STATION 5
STATIONS 1 AND 18 ARE SIMILAR
SCALE = 1 : 10

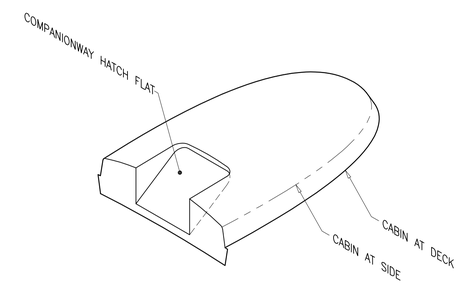

DETAIL B–2
CABIN ISOMETRIC PROJECTION
NOT TO SCALE

PLAN B–5
PLAN VIEW

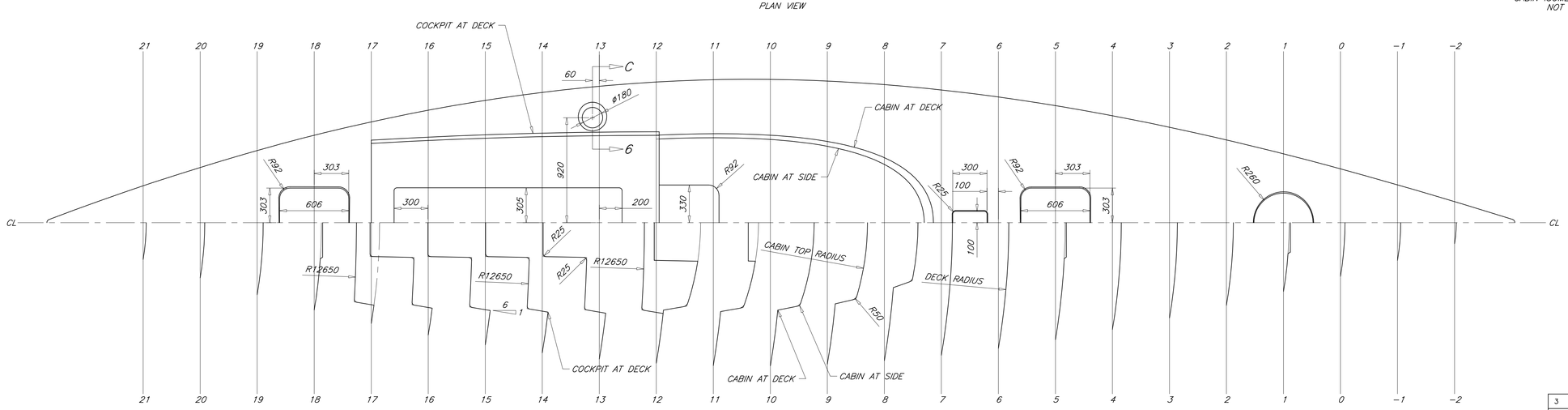

SECTIONS A–5
STATIONS

GENERAL NOTES

1. ALL LINES ARE TO OUTSIDE SURFACE OF DECK, CABIN, AND COCKPIT.
2. ALL DIMENSIONS ARE IN MILLIMETERS.
3. SEE REFERENCE 3 FOR DECK OFFSETS.
4. VERTICAL SURFACES TO HAVE 1/50 DRAFT.

NO	TITLE	DWG NO
3	TABLE OF OFFSETS	05–A5
2	FRAMING PLAN	05–C1
1	CONSTRUCTION DETAILS	05–C3

REFERENCES

REGISTERED PROFESSIONAL ENGINEER
PAUL R. KOTZEBUE
M 32745
EXP. 30 JUN 10
MECHANICAL
STATE OF CALIFORNIA

PAUL R. KOTZEBUE, PE
MECHANICAL ENGINEER
Encinitas, California USA

STOCK PLANS

12.9 METER SKERRY CRUISER

DECK LINES

DRAFTER: PK	DATE: 12 M1Y 10	SIZE: ARCH D	DWG NO. 05–A2	REV: –
CHECKER: PK	DATE: 12 MAY 10	SCALE: 1 : 20	SWBS — —	SHEET: 1 OF 1

THIS DRAWING REMAINS THE PROPERTY OF PAUL R. KOTZEBUE, PE AND MAY NOT BE USED FOR ANY PURPOSE WITHOUT WRITTEN CONSENT.